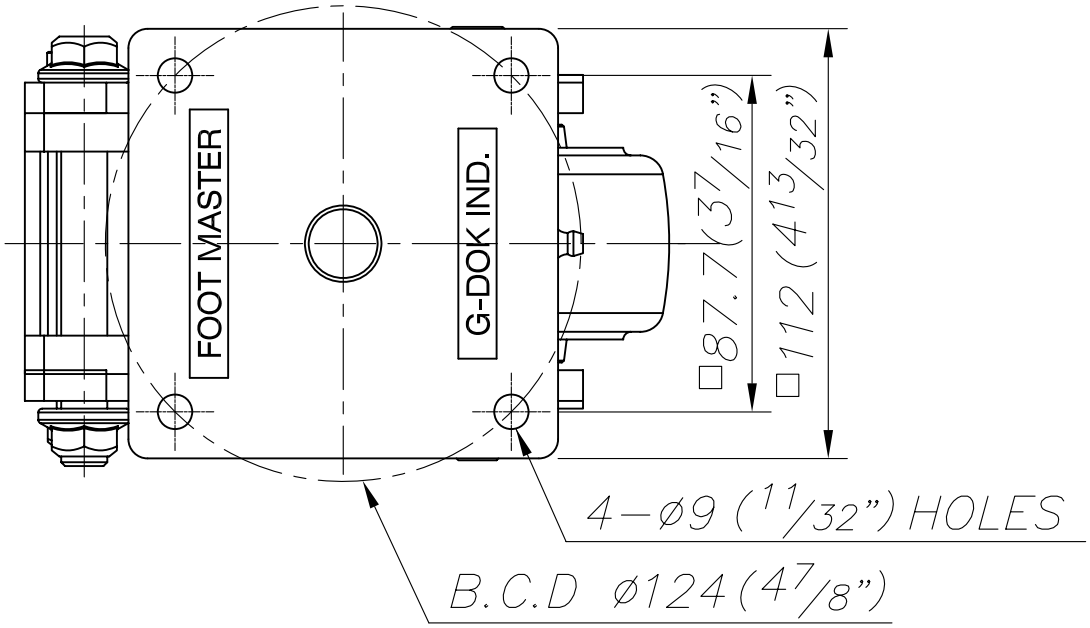

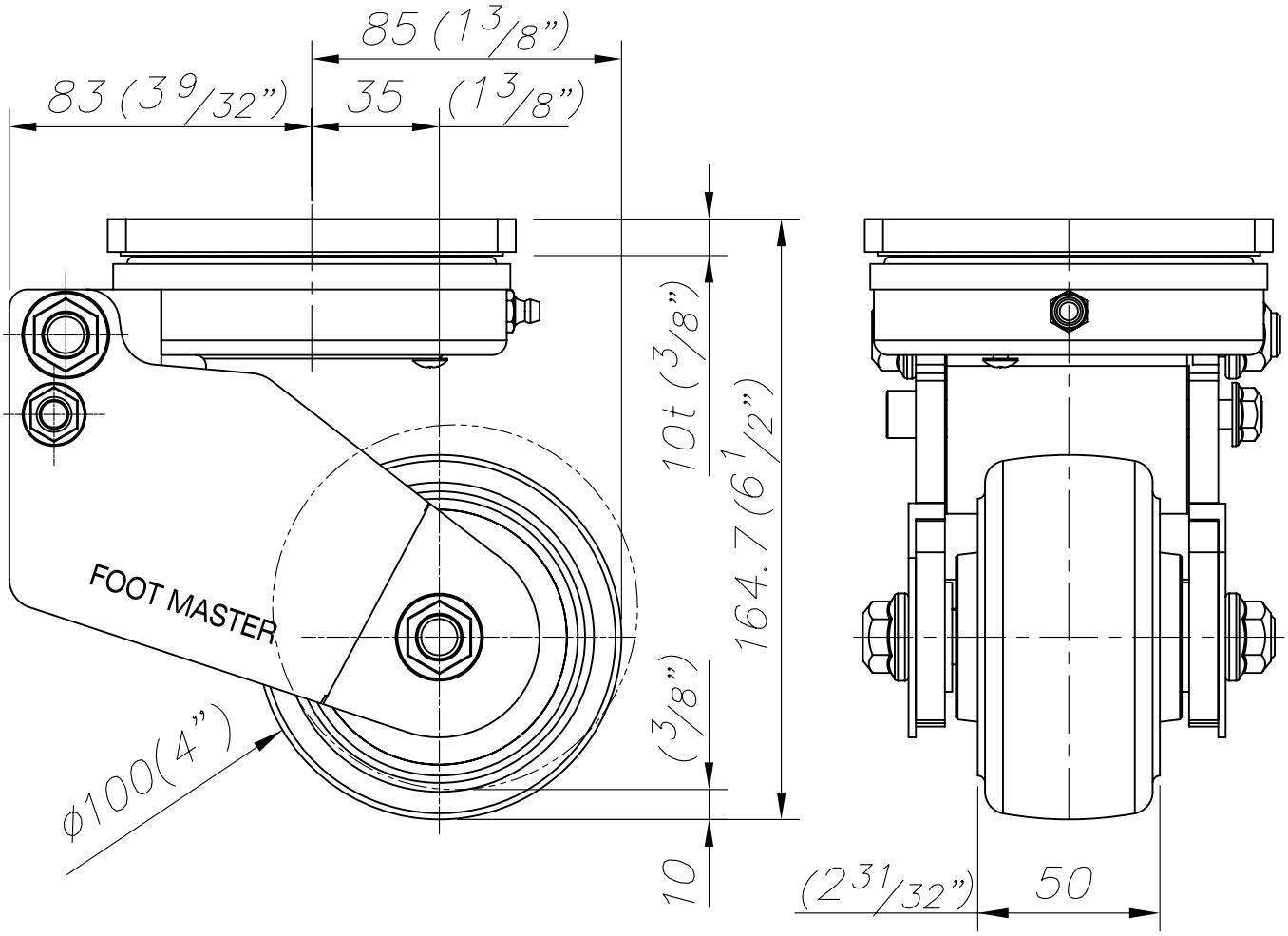

FOOT MASTER®	FOOMA®	G-DOK IND.	MODEL NAME	GXTS-100 SF

A B C E F G